KIRLIN ARCHITECTURAL LIGHTING

CATALOG #		TYPE
JOB NAME	WATTAGE	VOLTAGE

Latitudes Series

LRS-06507

Lensed 6" Downlight • White Trim • LED

Up to 60,000 Hour Life • Wet Listed

LM-79 Certified • LM-80 Qualified

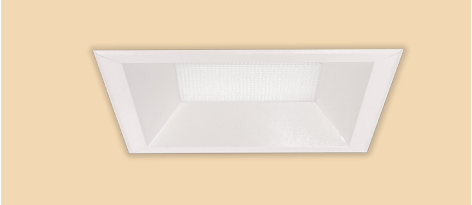

Specifications

Delivered System Performance
- Nominal Lumens: **Must Specify**
  Non-IC
  -2500L
- Select trim & beam distribution: see chart
- Select color (CCT): see chart; 80+ CRI standard; Option -HC for 90+ (15% lumen loss)
- 60,000 hour life (L70**)

Thermal Protection: SPECIFY VOLTAGE
- Thermal protector for insulation detection per UL/NEC Must specify input voltage

Thermal Management System
- Aluminum heat sink and components for cool operation, long life, and low maintenance

LED Driver - INTERNAL
- Indoor/Outdoor: -30°C to 60°C (-22°F to 140°F)
- 0-10V CCR 10% dimming standard
- 120-277V / 50-60 Hz standard; load insensitive

Trim Assembly
- Tapered aluminum all white smooth self-flanged trim (field paintable)
- Regressed tempered prismatic spread lens

Acrylic Enameled Aluminum Housing
- Rustproof and corrosion resistant: exceeds 1000 hour ASTM 5% salt spray test
- Shallow depth fits restricted plenums
- Cool operation extends component life
- Modular design; visible and fully serviceable through aperture
- Built-in plaster flange

Outlet Box (Galvanized)
- UL Listed, 14GA, insulated, removable cover
- ½" and ¾" knockouts

Installation & Hardware
- Indoor/outdoor in ceilings up to 1¼" thick or see option -79
- Compatible with fire rated enclosures (by others)
- 27" hanger bars & adjusting brackets (2) supplied

UL, C-UL (Canada) Compliance
- UL Listed: wet, damp or dry locations, covered ceilings
- Through-branch conductors (4 #12 AWG 90°C)

IEC & FCC Compliance
- Meets IEC/EN 60601-1-2 electromagnetic compatibility standard for medical electrical equipment
- FCC Part 15 certified for EMI/RFI emissions

FIVE YEAR Limited Warranty
- Complete standard fixture

Made in the USA *BAA Compliant* | FCC Part 15 Certified | UL Listed Wet, Damp, Dry

Options and Ordering Configuration

(Example: LRS-06507-2500L-277-MFL-41K-37F-RH-FS)

Must Specify				Optional			
Model	**Lumens**	**Volts**	**CCT† & CRI**	**Driver Options**	**Emergency Options**	**Trim Options**	**Other Options**
LRS-06507							
	-2500L	**-120** **-277** **-97†:** Other Voltage †Consult factory	**(Blank):** 3500°K, 80+ CRI **80+ CRI*** **-27K:** 2700°K **-30K:** 3000°K **-35K:** 3500°K **-41K:** 4100°K **-50K:** 5000°K ***Note:** Lumen Factor = 0.93 for -27K **90+ CRI**** **-27K-HC:** 2700°K **-30K-HC:** 3000°K **-35K-HC:** 3500°K **-41K-HC:** 4100°K **-50K-HC:** 5000°K ****Note:** Lumen Factor = 0.79 for -27K-HC; All Others = 0.85; consult factory	**(Blank):** Standard 0-10V CCR 10% dim **-D1†:** 0-10V 1.0% dim **-D2†:** 0-10V 0.1% dim **-D3†:** DALI 1.0% dim **-D4†:** DALI 100-0.1% dim **-D5†:** DMX512A 0% dimming instead **-D40:** -40°C (-40°F) driver; 0-10V 10% dim **-ECO:** Digital driver for Lutron EcoSystem controls. Dims to 1% or consult factory †Consult factory	**(Blank):** None **-ERH:** Remote emergency battery pack; Delivers 1000 lumens; CEC Compliant; Run time: 90+ minutes	**(Blank):** Standard all-white smooth-self-flanged downlight square with lens above **Trim Finishes** **-35T:** Silver (natural aluminum) acrylic enameled trim **-37T:** Dark bronze enamel trim **-38T:** Black enamel trim **-94:** Custom color; consult factory **Other Trim Features** **-13:** Clear poly lens below lens. Photmetric distribution unaffected **-23:** Frosted microprismatic lens **-32:** White trim extender, specify OD **-45:** Gasket between trim & ceiling **-46:** Gasket between trim & lens **-CF:** Custom color filter (Rosco). Specify **-DF:** Electrically isolated "dead front" gasketed trim **-WA:** White acrylic (flat) diffuser provides wide flood distribution	**(Blank):** None **Mounting** **-79:** Extension collar for ceilings up to 2" thick **-RH:** Joist mounting hardware instead **Other Options** **-99:** Special modification; consult factory **-FS:** Fused primary; One per fixture **-SH:** Sealed housing and junction box

Kirlin Lighting | 3401 E. Jefferson Ave., Detroit, MI 48207-4232, USA | P: 313.259.6400 | www.kirlinlighting.com

DUE TO CONTINUING PRODUCT IMPROVEMENTS, KIRLIN LIGHTING RESERVES THE RIGHT TO CHANGE SPECIFICATIONS WITHOUT NOTICE. VISIT WWW.KIRLINLIGHTING.COM FOR THE MOST CURRENT DATA.

KIRLIN ARCHITECTURAL LIGHTING

Dimensions

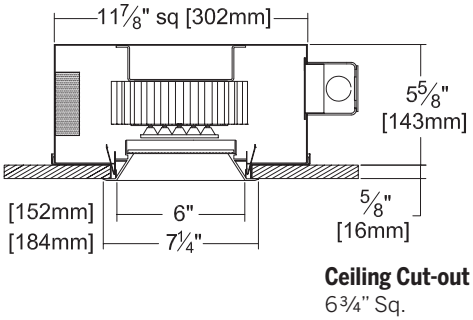

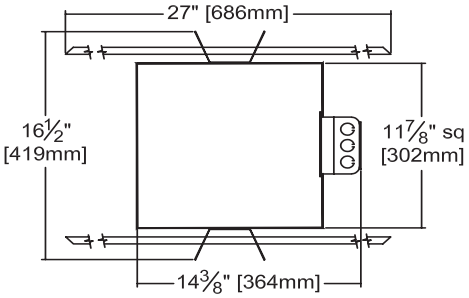

** See notes on page 1 for additional info on Lumen Factors*

Photometry - Installed Complete Fixture

LM-79 IESNA Certified Photometry from Independent Lab

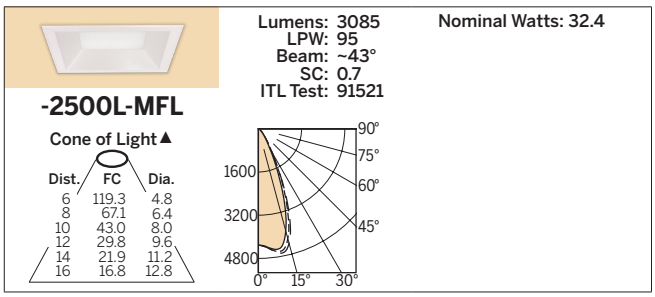

LED manufacturers maintain a tolerance of +/-7% on flux (lumens) and power (electrical) measurements.

▲ Cone of Light Key
Dia. (in ft.) shown is where FC value is half the FC at nadir.

Dist. Distance (Ft.) from fixture
FC Footcandles at nadir (0°)
Dia. Circle of light at 50% of FC

LIMITED WARRANTY: CATALOGED KIRLIN FIXTURES ARE WARRANTIED FREE OF DEFECTS IN WORKMANSHIP OR MATERIAL FOR FIVE YEARS FROM DATE OF PURCHASE, INSTALLED TO N.E.C., IN NORMAL USE. Manufacturer at his option will replace or repair such fixture or refund the purchase price on presentation of proof of purchase and defective fixture at the offices of manufacturer within five years of original shipment. Liability of manufacturer is limited to the foregoing, and manufacturer shall not be liable for any other damages, direct or indirect, sustained or suffered by purchaser or any person. This warranty is supplied to the buyer in place of all other warranties, expressed or implied. Seller does not warrant as to merchantability or fitness for a particular use, nor will any oral statement constitute a warranty or amend this specific warranty. Abnormal use, abuse of the fixture, improper installation, or repair or modification of the fixture without prior written authorization from the manufacturer will render the warranty void.

Kirlin Lighting | 3401 E. Jefferson Ave., Detroit, MI 48207-4232, USA | P: 313.259.6400 | www.kirlinlighting.com

DUE TO CONTINUING PRODUCT IMPROVEMENTS, KIRLIN LIGHTING RESERVES THE RIGHT TO CHANGE SPECIFICATIONS WITHOUT NOTICE. VISIT WWW.KIRLINLIGHTING.COM FOR THE MOST CURRENT DATA.