KIRLIN

Best Practices for Healthcare Lighting

Neonatal Intensive Care Unit

CHRIS
VP Sales & Marketing

RICHARD
Regional Manager - West

SCOTT
Regional Manager - Central

CHAD
National Sales Manager

Key Focus Areas

KIRLIN
HEALTHCARE LIGHTING

Areas of Expertise

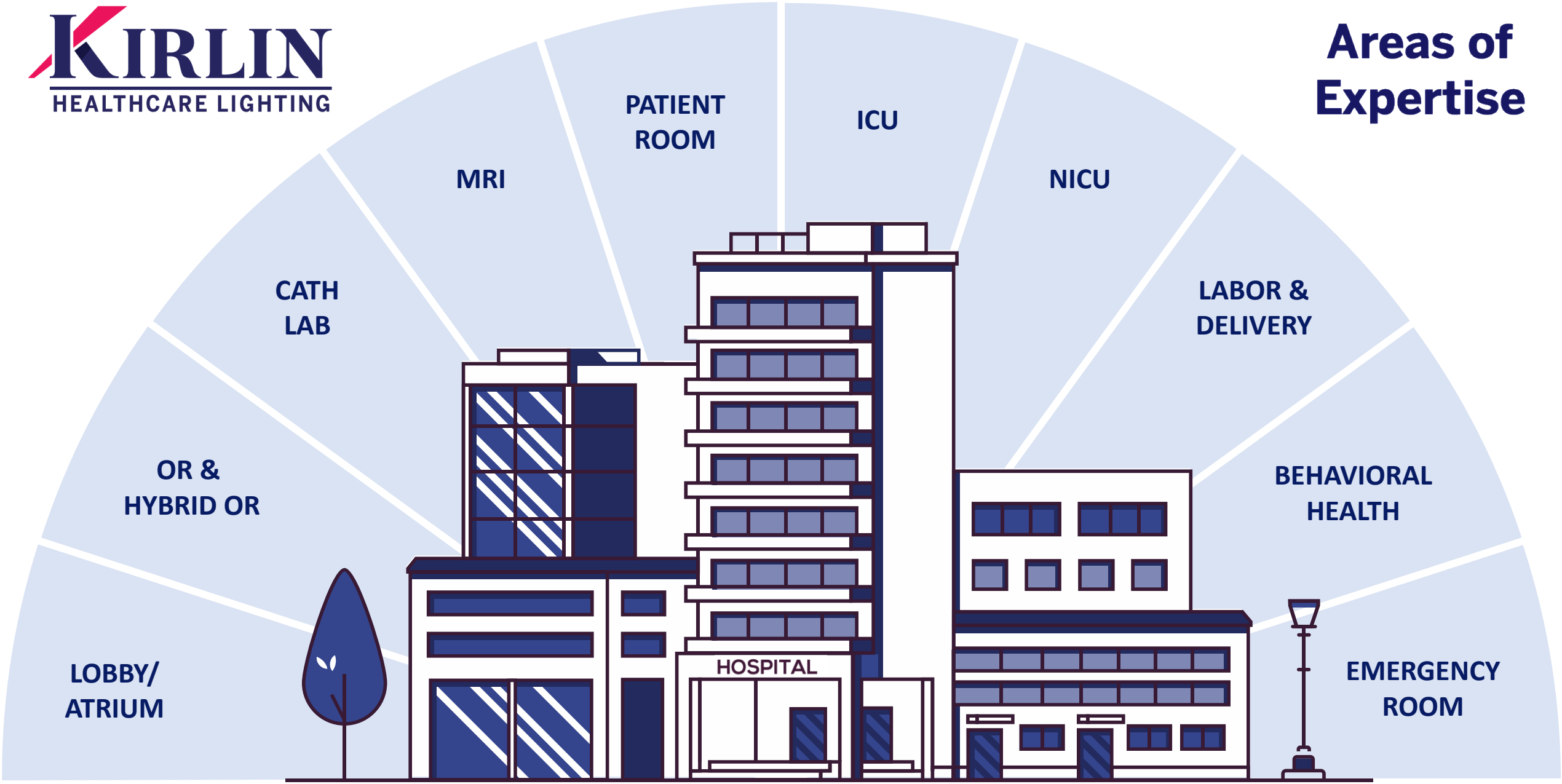

KIRLIN
HEALTHCARE LIGHTING

Areas of Expertise

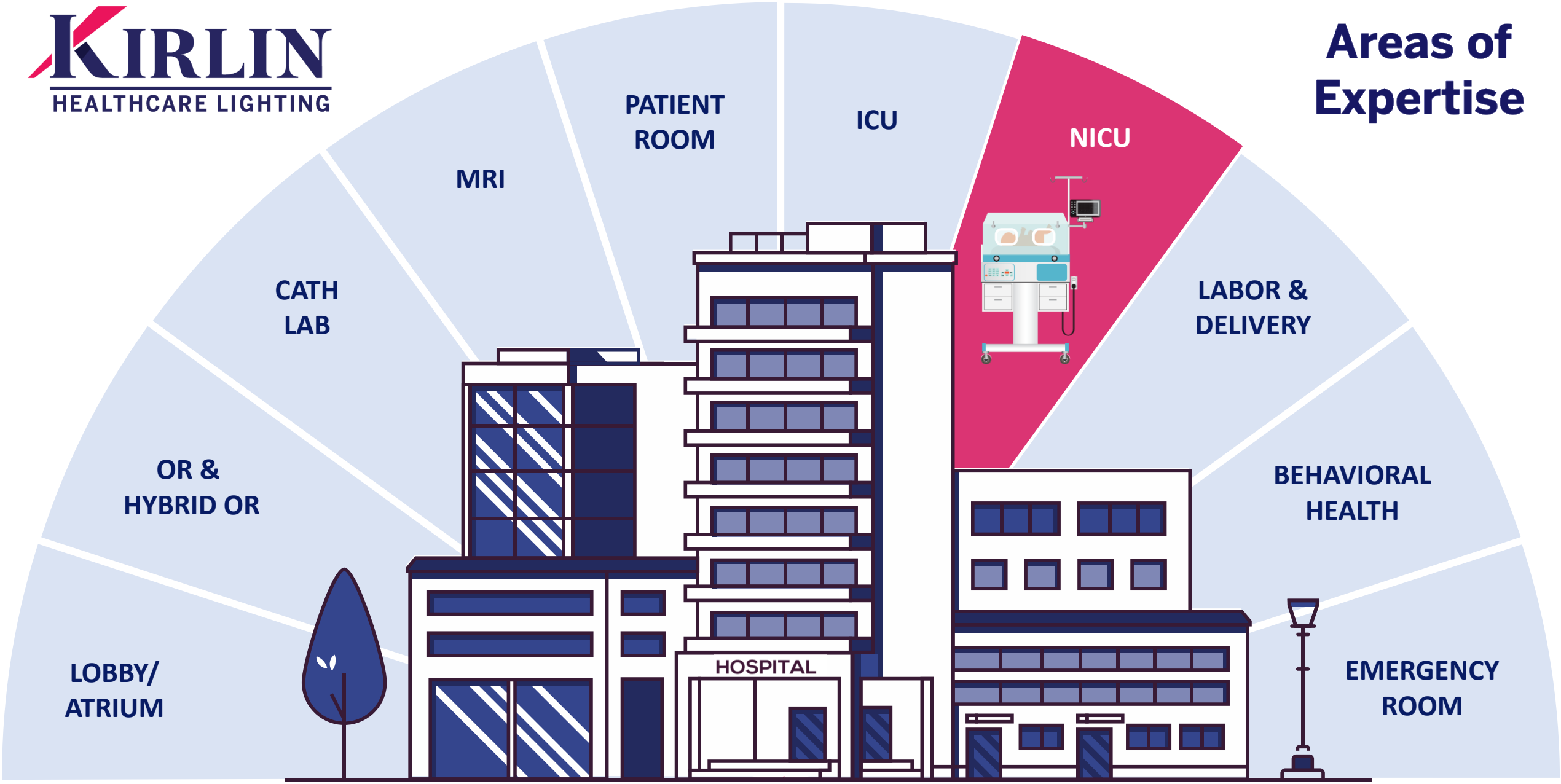

What is the NICU?

- An intensive care unit designed to treat critically ill newborns who require advanced technology and highly trained healthcare professionals
- Common causes for NICU admission are:
  - Preterm (born before 37 weeks)
  - Low birth weight (less than 5.5 lbs)
  - Respiratory distress
  - Infection
  - Birth defects

NICU Levels (in North America)

LEVEL 1

BASIC CARE

Level I NICUs provide care for healthy, full-term babies. They also stabilize near-term babies to get them ready to be moved to specialized facilities.

LEVEL 2

ADVANCED CARE

Level II NICUs offer care for babies born at or after 32 weeks and babies who are recovering from more serious health problems.

LEVEL 3

SPECIALIZED CARE

Level III NICUs care for very sick babies and offer access to a wide range of pediatric specialists and equipment, such as X-rays and ventilation support. The babies in these nurseries are generally born earlier than 32 weeks or have critical illnesses.

LEVEL 4

HIGHEST LEVEL OF CARE

Level IV NICUs provide the highest level of neonatal care. They have a full range of healthcare providers, including pediatric subspecialists, specialized nurses and equipment to care for very sick babies.

Design Trend: Private NICU

Open Ward → **Private**

Promoting Health in the NICU

Why are Private Rooms Preferred?

- Lower Light Levels
- Lower Sound Levels
- More Parental Bonding
- More Breastfeeding
- Shorter Stays
- Reduced Exposure to Infection

The Scientific Case for Private Rooms

2017 Study: Single Room Design Leads to Reduction in 7 NICU Morbidities:

- NEC
- Intracranial hemorrhage
- Sepsis
- Bronchopulmonary dysplasia
- Neurodevelopment
- Length of Stay
- Readmission

Downside: Reduced language skills

Appendix I: Evidence summary of the possible link between neonatal morbidity and single room design

Morbidity	Rationale for effect of single room design
Necrotising entero-colitis (NEC)	Improved rates of breastfeeding in SR care, and the link between breastmilk and NEC.[17,26]
Intracranial hemor-rhage/periventricular leukomalacia	SR care has been associated with more developmentally appropriate light and sound, and increased parental involvement.[13] May decrease apnea, and stabilize cerebral perfusion.[13]
Sepsis	Empirical evidence of decreased infection, theoretical support from decreased exposure.[13,14]
Bronchopulmonary dysplasia	RCT level evidence for reduction. May be tied to increased stability resulting in reduced amount and fluctuation in need for inspired oxygen.[13,14]
Neurodevelopment	SR care is more developmentally appropriate (light and sound), enhances maternal-infant non-separation, and facilitates increased parental participation and skin-to-skin contact. Evidence that these factors influence development, and that SR care with high parent involvement improves developmental outcomes measured at 18 months.[20]
Length of stay	Most robust finding across studies has been reduction in length of stay. Potentially the result of increased clinical stability paired with increased parent involvement and resulting confidence in abilities to care for infant.[14]
Readmission	At least one study found a reduction in readmission, primarily related to a reduction in infections associated with feeding difficulties. This may be explained by increased parental competence associated with SR design.[14]

Infection in the NICU

Sepsis or infection is the most common reason for neonatal death and poor outcomes. Infections are more common in:

- Premature infants who lack protective antibodies
- Infants with a low birth weight
- Infants with a low APGAR score
- Infants whose mother has certain risk factors

Major NICU Risk

NICU Considerations

Enhanced Visual Acuity

- Due to small size of patients, “minor” procedures can pose major challenges
- Immense need for accurate color rendering to identify conditions early (e.g. Cyanosis, NEC)

Improved Patient Comfort

- Patients’ retinas are not fully developed
- Patients need to develop their diurnal (wake/sleep) patterns

A Safer Environment

- Patients’ immune systems are very weak
- Bassinets are mobile and moved regularly – area should be free of hazards

Lighting Needs in the NICU

	PROCEDURAL	AMBIENT	WAYFINDING
Private	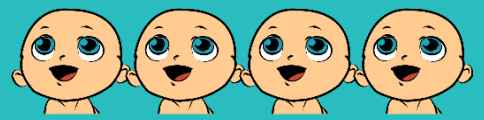		
Open	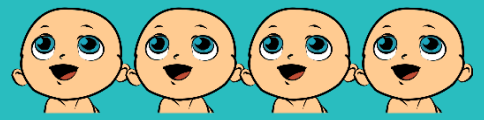		

= Level of Importance

Procedural Lighting in the NICU

Procedural Lighting in the NICU

The Challenge: Deliver targeted, high-color-rendering illumination for critical procedures on the smallest patients

Procedural Lighting in the NICU

The Solution: Recessed, high-color-rendering, flexible illumination at proper angles for visual acuity

Recessed Motorized

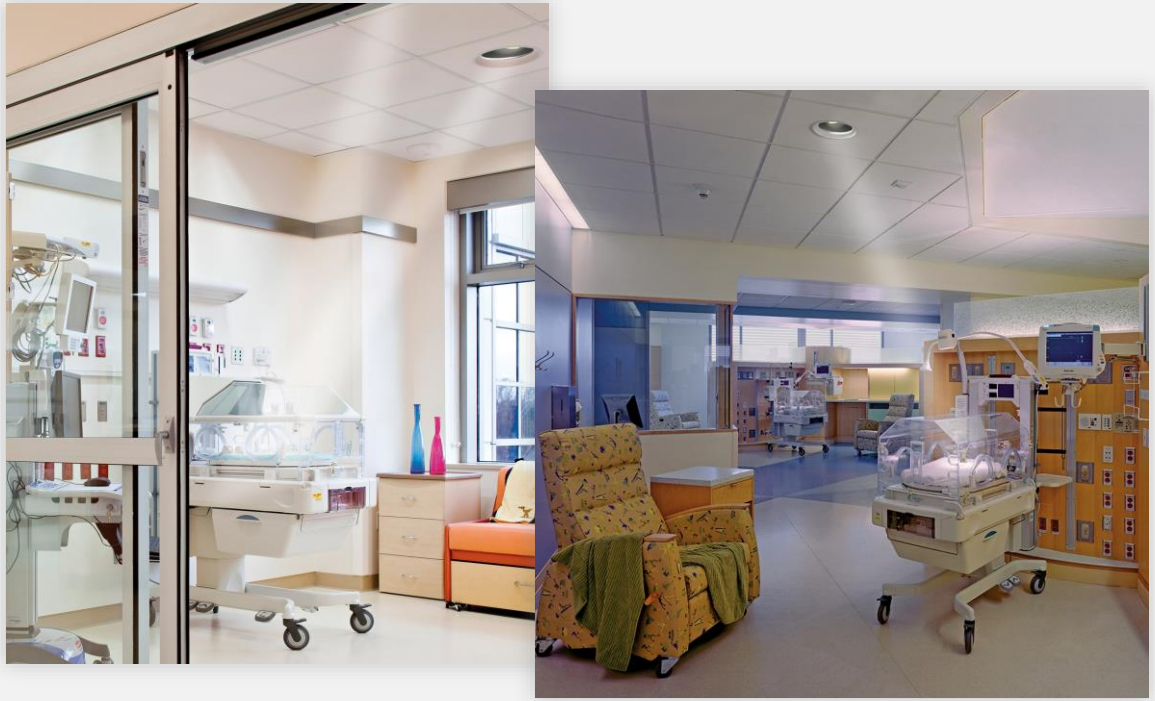

Recessed Non-Motorized

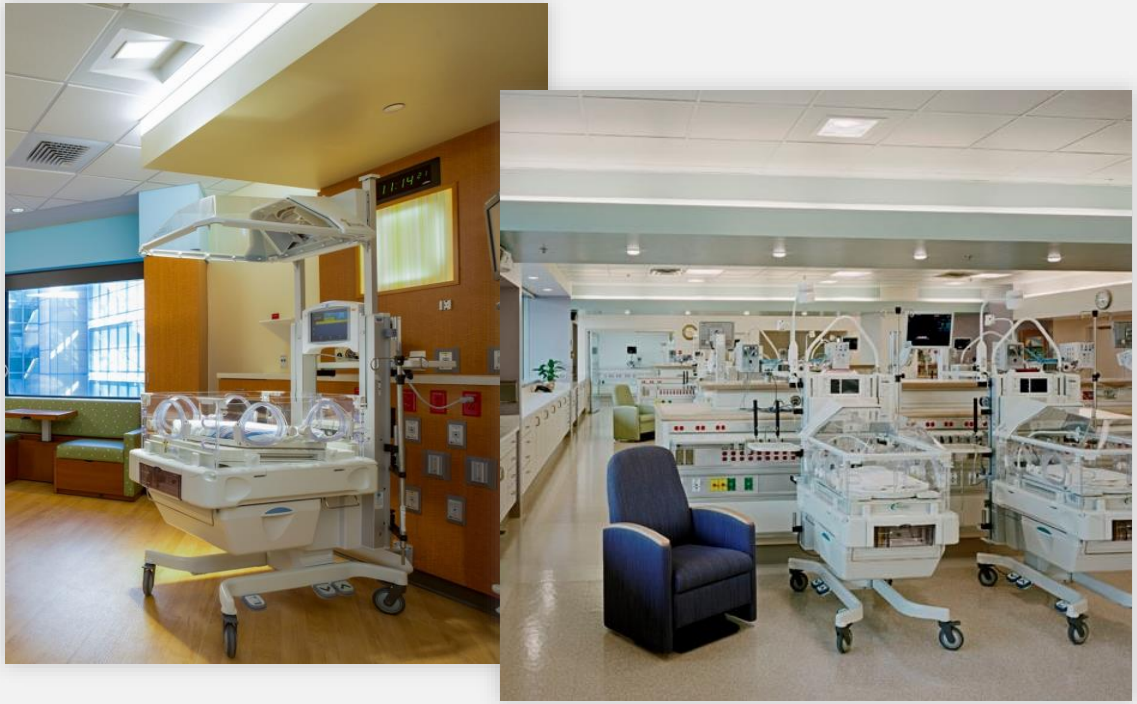

INFRALED® PRO: Recessed Motorized Patient Lighting

PRO 60

- **17” trapezoid**
- 60° angle of illumination for deep cavity exams and procedures
- **Blue LED indicator**

PRO 45

- **19” round**
- Designed to facilitate up to 45° tilt & 360° rotation
- **Blue LED indicator**

PRO 35

- **12” round**
- 35° tilt, 360° rotation
- **Blue LED indicator**

PRO 25

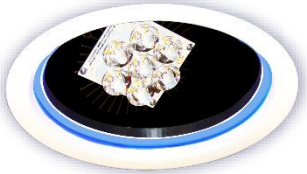

- **9” round**
- 25° tilt, 360° rotation
- **Blue LED indicator**

PRO 25: Procedural Lighting in the NICU

Enhanced Visual Acuity

- High color-rendering with Cyanosis Observation Index of 2.7 and CRI of 95+
- Achieves optimal NICU angle of 20°
- Fully dimmable & remote-adjustable

A Safer Environment

- Fully recessed, IP66 rated, with sealed housing
- Sterile and easy to clean with anti-microbial finish

Improved Patient Comfort

- Dimming to 1% ensures clinicians can use minimum level of light needed to complete their procedural tasks

PRO 25: Exam Light for NICU, ICU, Patient Room

“Baby MED”

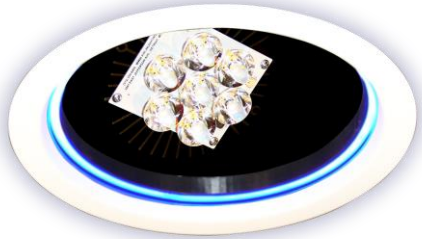

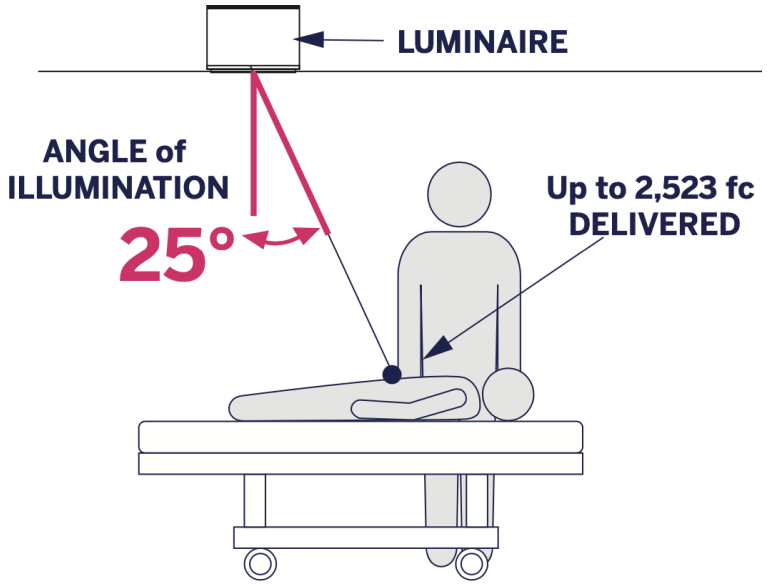

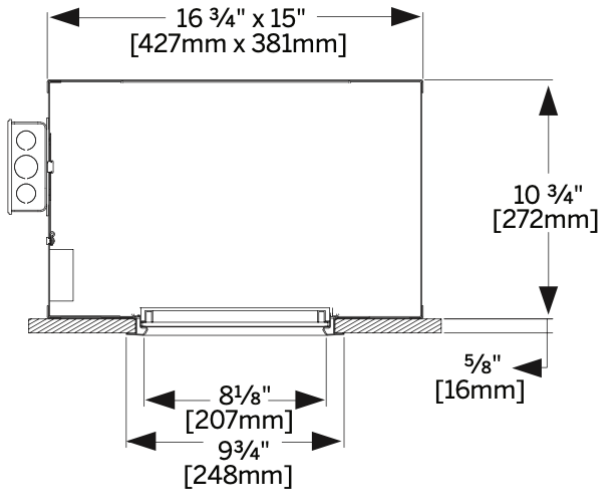

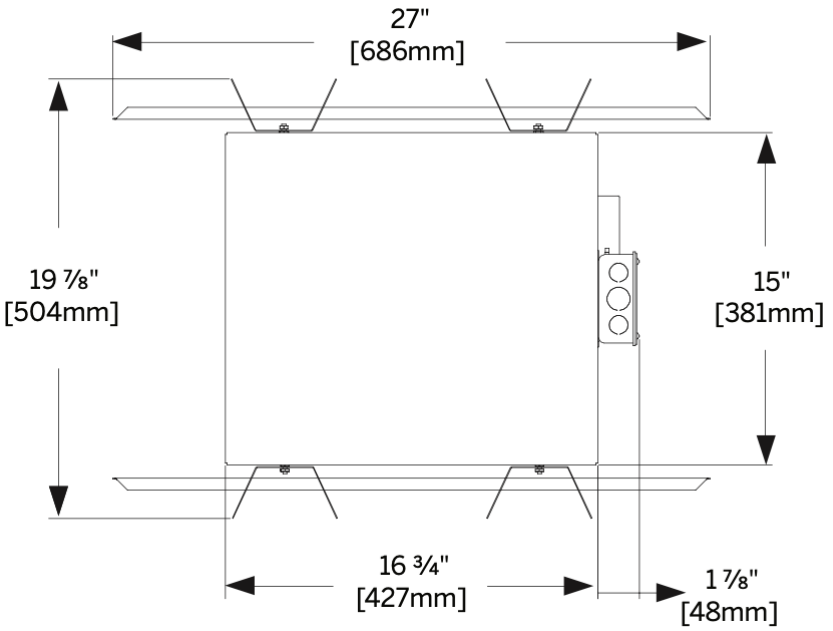

INFRALED® PRO: Better than the Boom!

Boom-Mounted	Portable	INFRALED® PRO
• Difficult to clean or disinfect • Often under-powered • Physical hazard with drift issues	• Difficult to clean or disinfect • Often under-powered • Impossible to find • Trip & fall hazard	• Fully recessed with IP66 trim & anti-microbial finish • Easy to disinfect (luminaires & controls) • One touch direction and intensity control

High CRI in Multiple Chromaticities

The difference is **95 CRI** with ultra-high R6, R9, R13 and R15

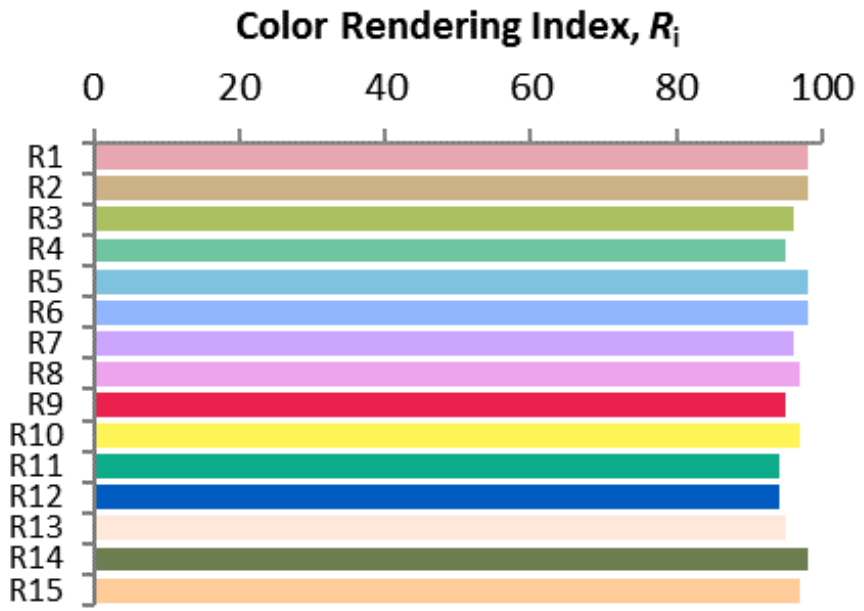

3 Chromaticities (Color Temperatures)

3500K Mid-White	Labor/Delivery NICU
4100K Cool White	ICU Cath Lab
5000K Ultra-Cool White	EP Lab Hybrid OR

Spotlight: New-York Presbyterian

- Level IV NICU with dedicated OR & MRI
- Opened August 2020
- 66 Private NICUs, including several for multiples (twins, triplets)
- Procedural lighting: Kirlin INFRALED PRO
- One fixture per isolette

Procedural Lighting in the NICU

The Solution: Recessed, high-color-rendering, flexible illumination at proper angles for visual acuity

Recessed Motorized

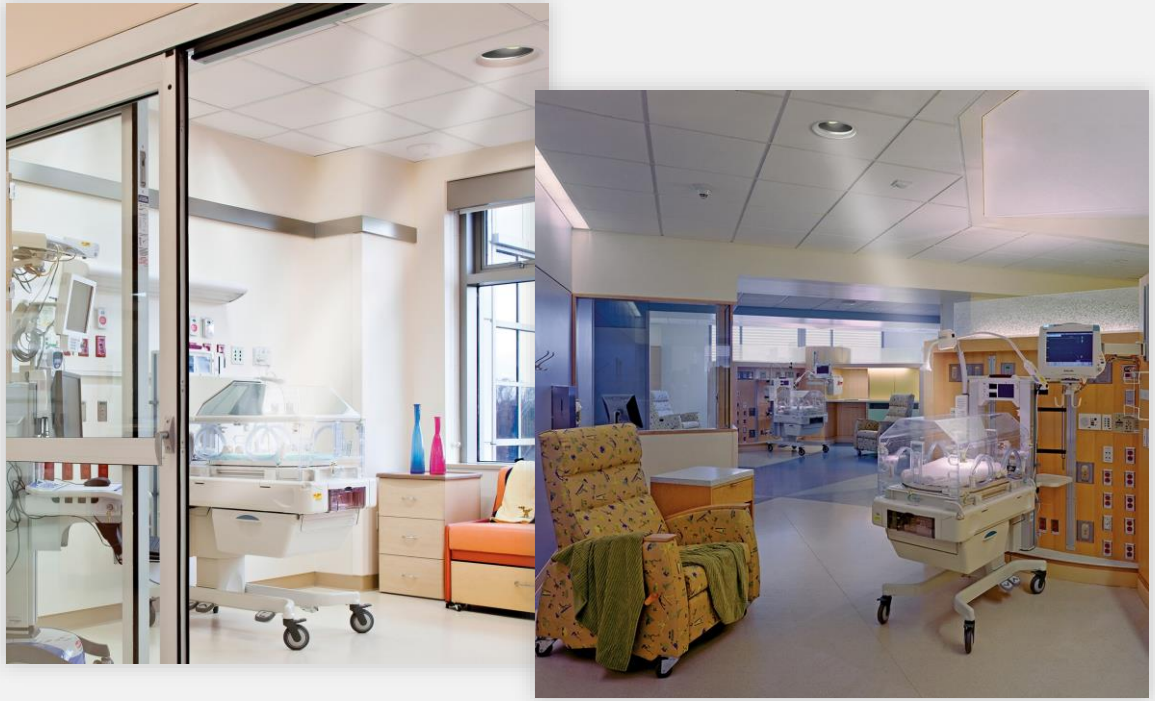

Recessed Non-Motorized

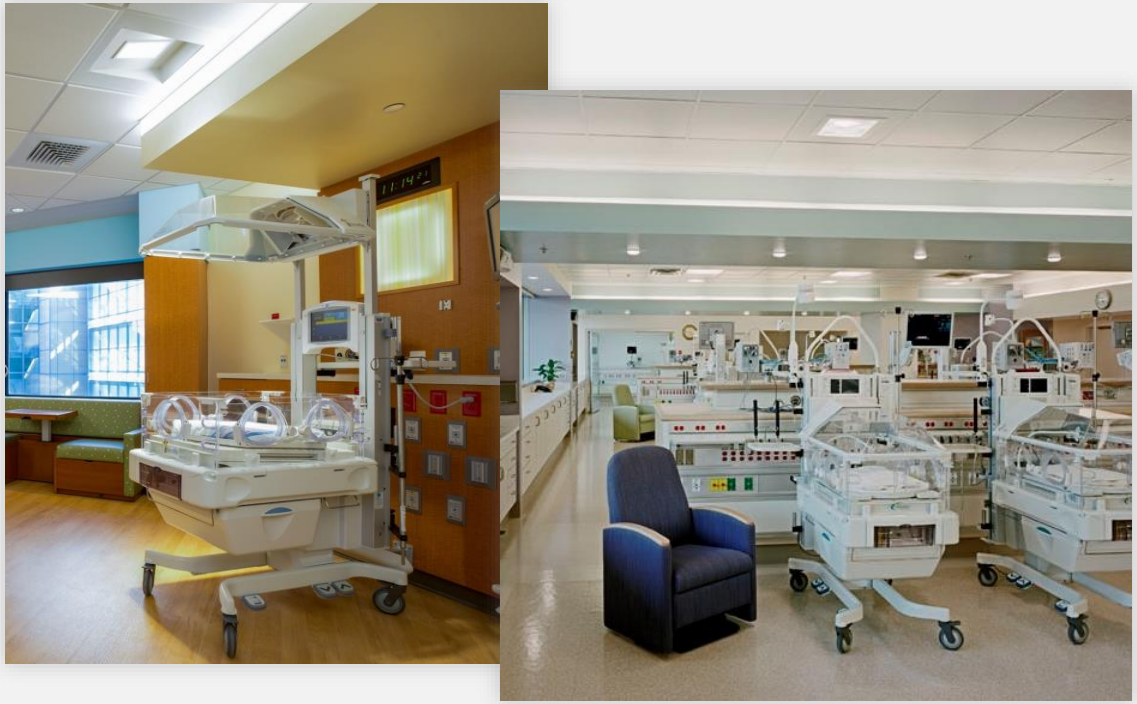

Non-Motorized Adjustable Procedural Light

Enhanced Visual Acuity

- High color-rendering with CRI of 90+
- Achieves optimal NICU angle of 20°
- Fully dimmable to 10%, 1%, or 0.1%

A Safer Environment

- Fully recessed, lensed
- Sterile and easy to clean with anti-microbial finish

Improved Patient Comfort

- Dimming to 1% or lower ensures clinicians can use minimum level of light needed to complete their procedural tasks

MRR-07505-3500L

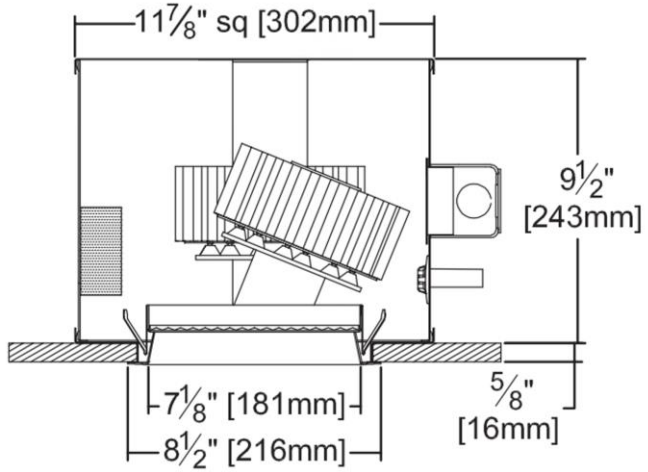

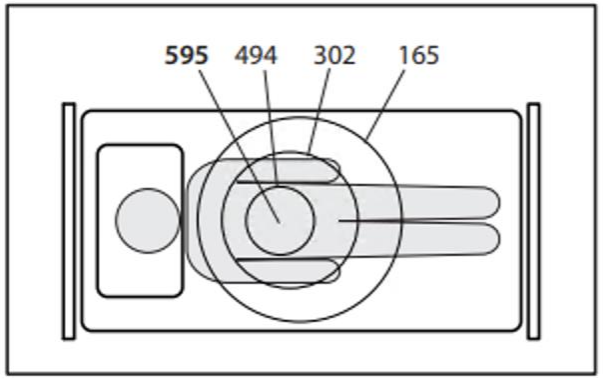

fc on Task: 8′ Ceiling 3′6″ Work Plane

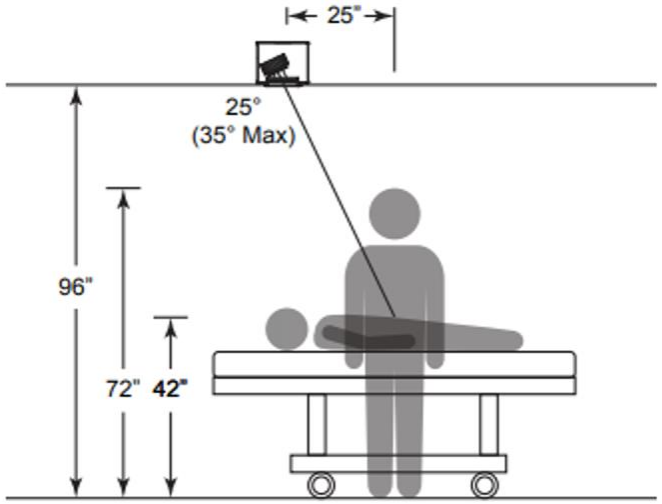

Spotlight: West Penn Hospital

- Level III NICU featuring natural light & spacious rooms
- Opened April 2019
- 23 Private NICUs, including 3 for multiples (twins, triplets)
- Procedural lighting: Kirlin MRR-07505-3500L
- Two fixtures per isolette

Spotlight: West Penn Hospital

- Level III NICU featuring natural light & spacious rooms
- Opened April 2019
- 23 Private NICUs, including 3 for multiples (twins, triplets)
- Procedural lighting: Kirlin MRR-07505-3500L
- Two fixtures per isolette

Spotlight: West Penn Hospital

- Level III NICU featuring natural light & spacious rooms
- Opened April 2019
- 23 Private NICUs, including 3 for multiples (twins, triplets)
- Procedural lighting: Kirlin MRR-07505-3500L
- Two fixtures per isolette

Ambient Lighting in the NICU

Level I
Open Ward
with indirect lighting

Level IV Private NICU

with indirect lighting, ambient downlights, and procedural lights

Ambient Lighting in the Private NICU

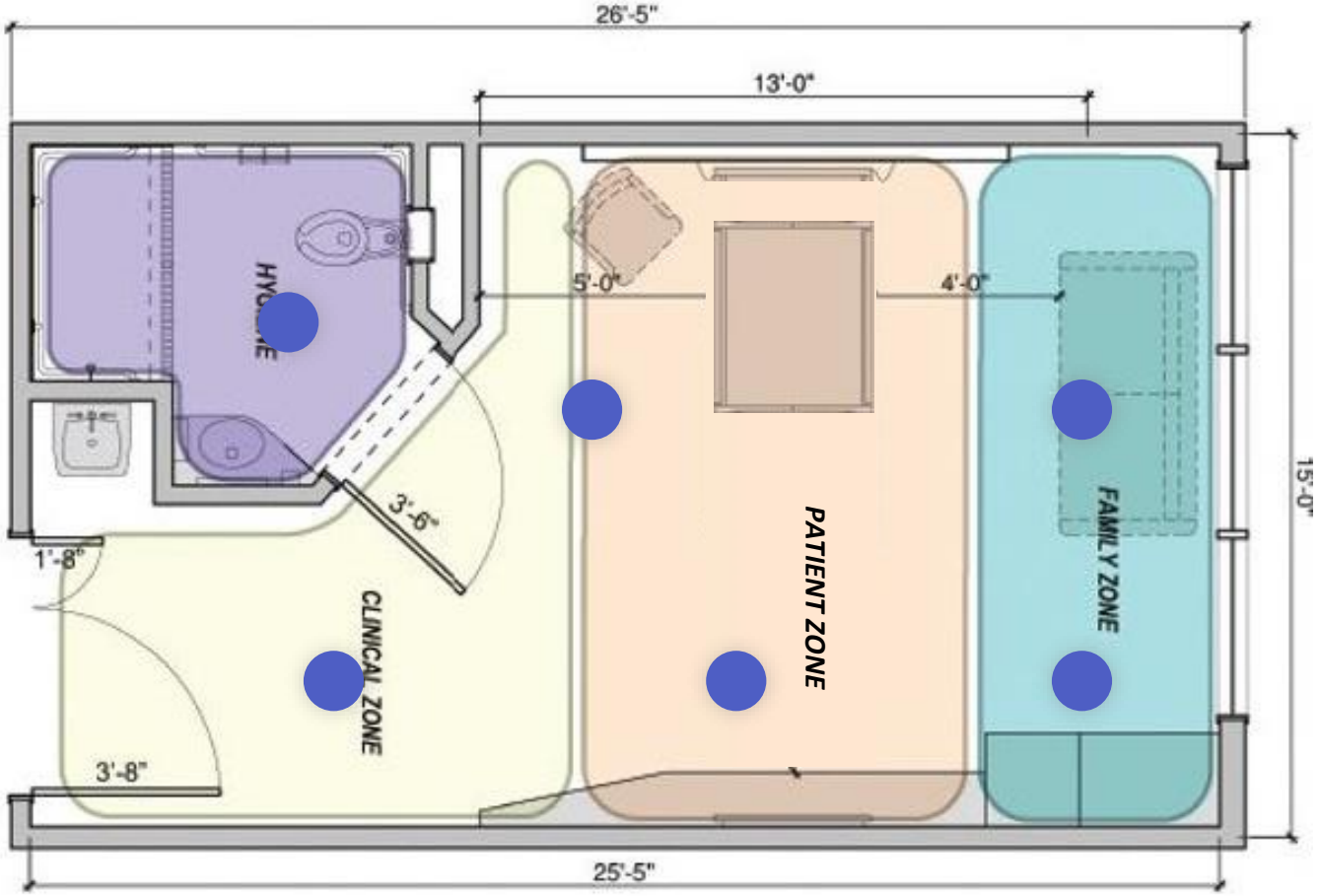

Ambient Downlights

- Lensed 4” Downlight
  - Antimicrobial finish
  - Tunable white CCT available

LRR-04005 **LRS-04045**

2700 K | 3000 K | 3500 K

2pt Tunable White: 2700-6500K

Radiance: 1650-8000K

Spotlight: Children's Hospital Wisconsin

- Level IV NICU
- Phase 2 opened January 2017
- 70 Private NICUs, including several for multiples (twins, triplets)
- Ambient lighting: Kirlin 6" downlight LRR-06019 with DALI driver

Spotlight: Children's Hospital Wisconsin

- Ambient lighting: Kirlin LRR-06019 with DALI driver
- Why DALI?
  - Each NICU room features sophisticated audio monitoring
  - Small LED lights embedded in the headwall change color to indicate rising noise levels.
  - When audio levels reach 55 dB, the LEDs turn amber.
  - When noise reaches a critical level of 65 dB, they turn bright red.

Wayfinding Lighting in the NICU

More Overnights, More Private Restrooms

CS Mott Children's – Ann Arbor, MI

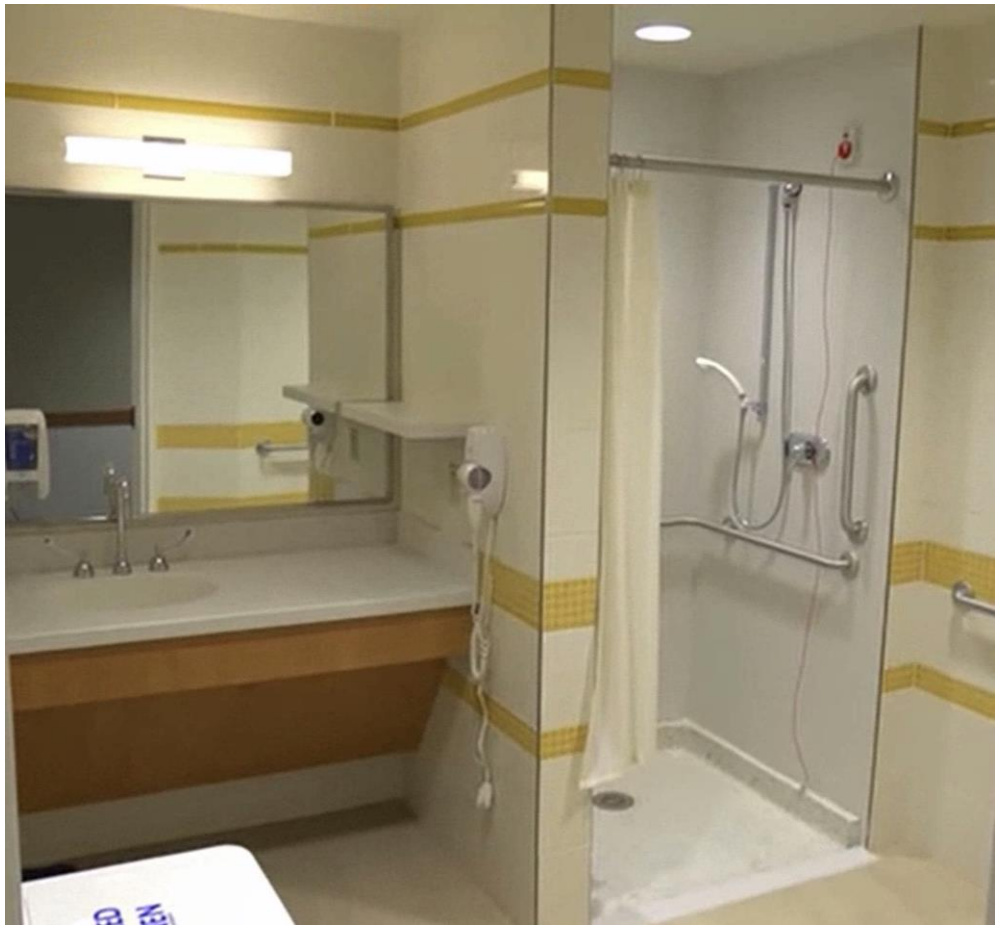

Children's Hospital of Wisconsin

Wayfinding in the NICU

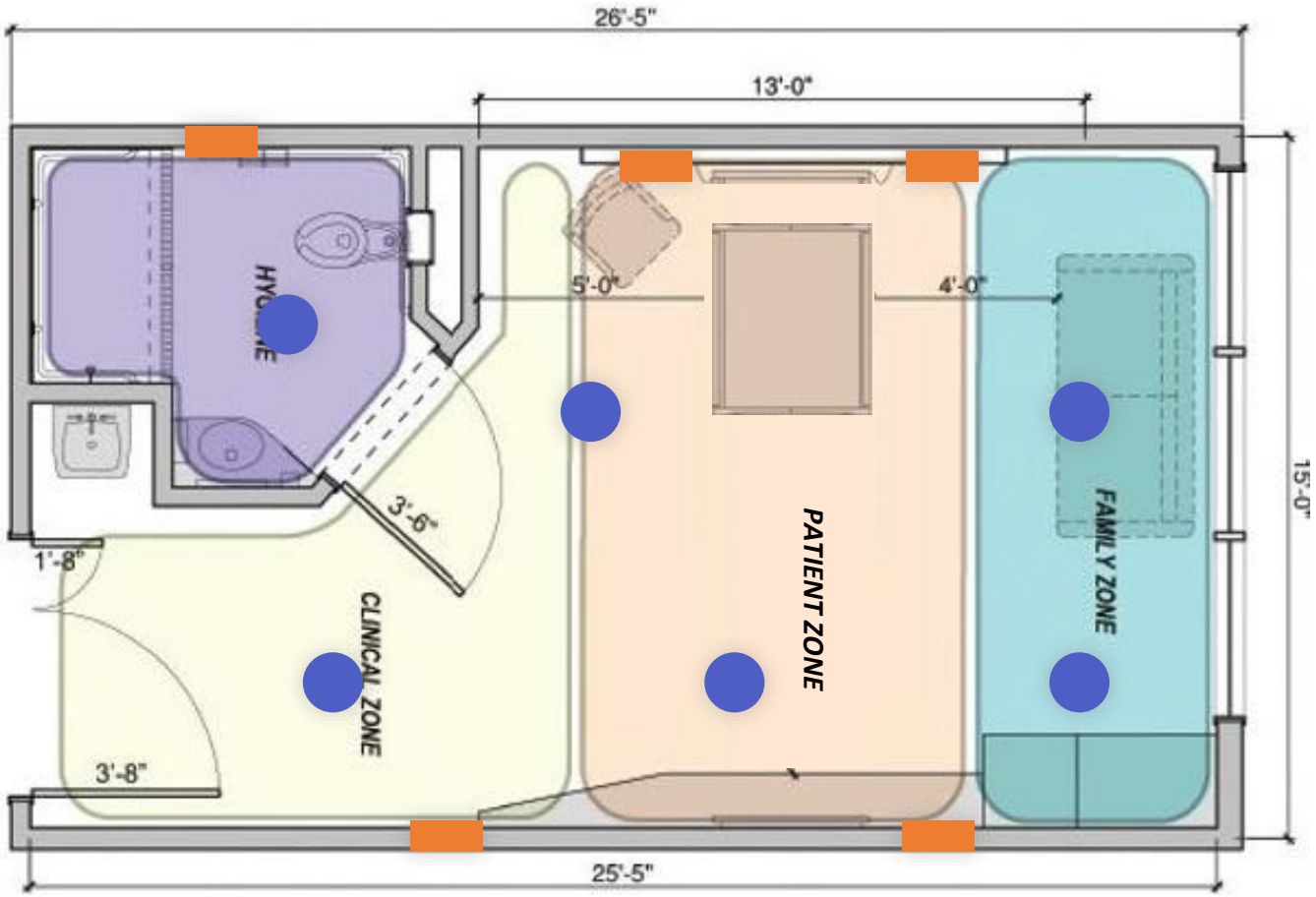

Ambient

Wayfinding

- NightLights (including wet-listed), ChartLights

Lighting Needs in the NICU

	PROCEDURAL	AMBIENT	WAYFINDING
Private			
Open			

A Legacy in Healthcare Lighting

Penn Medicine
University of Pennsylvania Health System

UW Health

BRIGHAM HEALTH
BWH BRIGHAM AND WOMEN'S HOSPITAL

Yale NewHaven Health

NewYork-Presbyterian

MICHIGAN MEDICINE
UNIVERSITY OF MICHIGAN

Mount Sinai

Northwestern Memorial HealthCare

MGH 1811 MASSACHUSETTS GENERAL HOSPITAL

UCSF Medical Center

Stanford HEALTH CARE

MAYO CLINIC

Cedars Sinai

UPMC
University of Pittsburgh Medical Center

JOHNS HOPKINS MEDICINE

Cleveland Clinic

UCLA Health

NYU Langone MEDICAL CENTER

HOUSTON Methodist LEADING MEDICINE

Trusted by the Best

Kirlin lighting is trusted by 19 of the U.S. News's Top 20 Honor Roll hospitals

Join Us Every Month, or On Demand!

Questions?